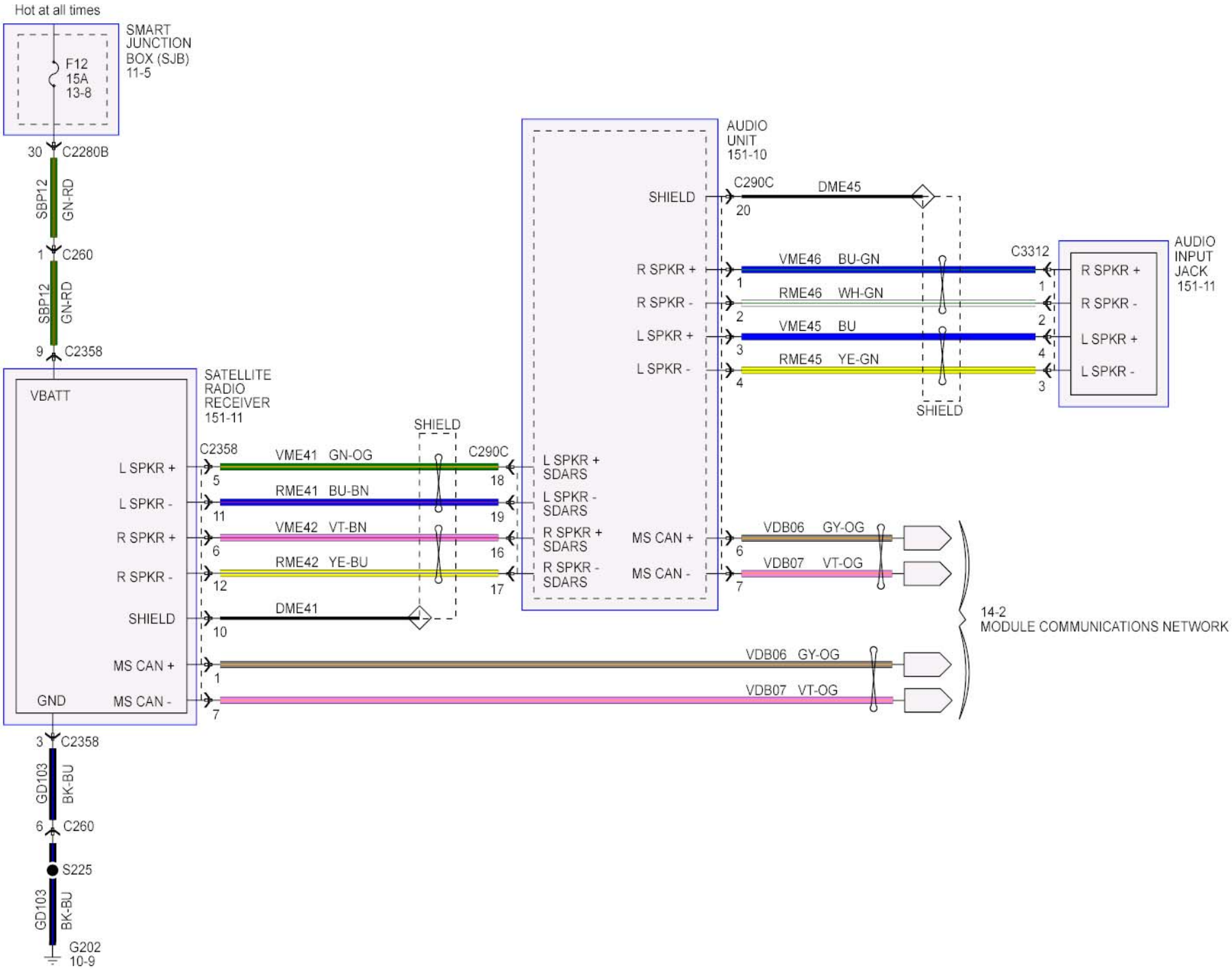PREMIUM AUDIO WITH SDARS SINGLE CD