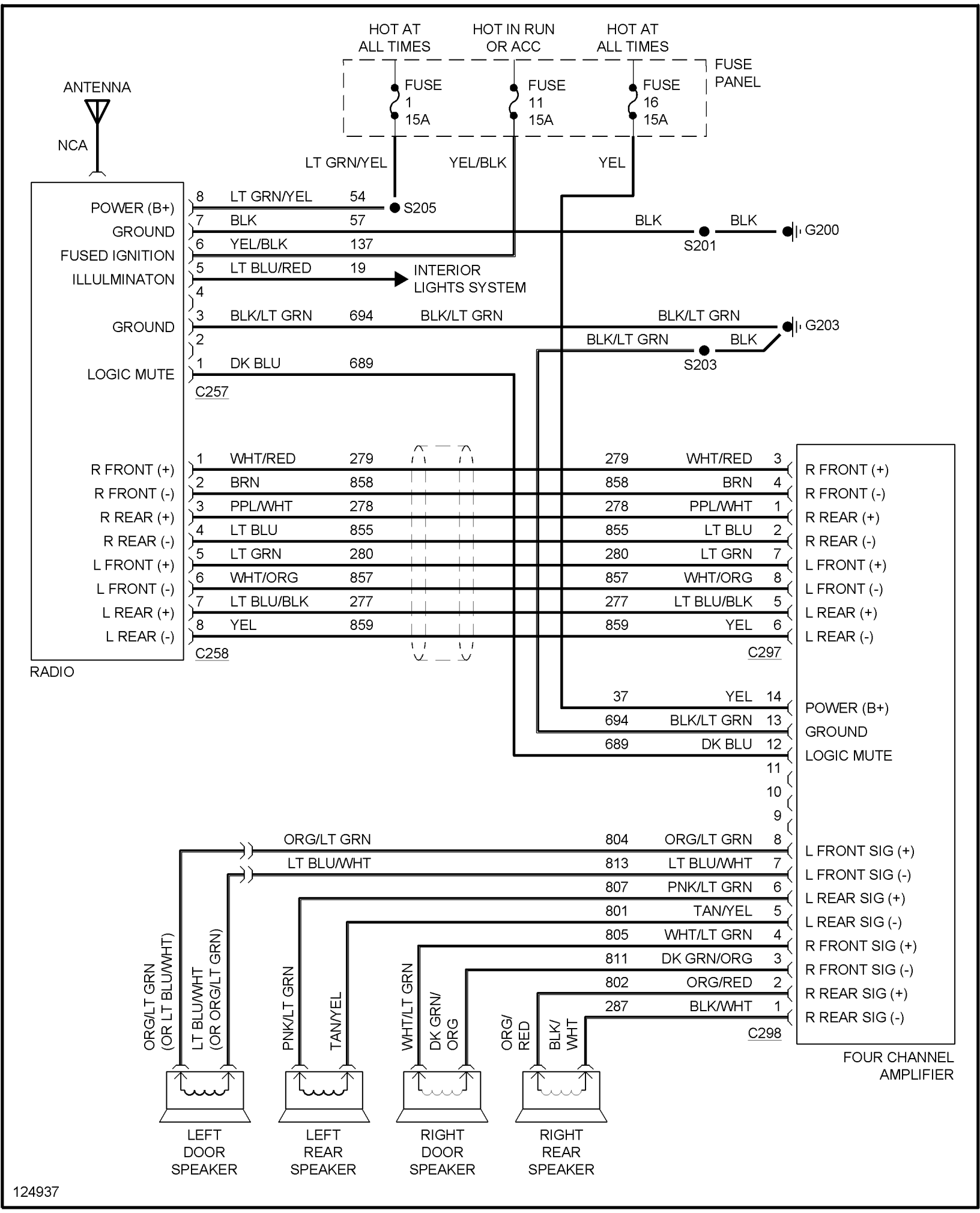
HOT AT ALL TIMES
HOT IN RUN OR ACC
HOT AT ALL TIMES
FUSE PANEL
FUSE 1 15A
FUSE 11 15A
FUSE 16 15A
ANTENNA
NCA
LT GRN/YEL
YEL/BLK
YEL
POWER (B+)
GROUND
FUSED IGNITION
ILLULMINATON
GROUND
LOGIC MUTE
8 LT GRN/YEL 54
7 BLK 57
6 YEL/BLK 137
5 LT BLU/RED 19
4
3 BLK/LT GRN 694
2
1 DK BLU 689
C257
S205
BLK
BLK
S201
G200
INTERIOR LIGHTS SYSTEM
BLK/LT GRN
BLK/LT GRN
G203
BLK/LT GRN
BLK
S203
R FRONT (+)
R FRONT (-)
R REAR (+)
R REAR (-)
L FRONT (+)
L FRONT (-)
L REAR (+)
L REAR (-)
1 WHT/RED 279
2 BRN 858
3 PPL/WHT 278
4 LT BLU 855
5 LT GRN 280
6 WHT/ORG 857
7 LT BLU/BLK 277
8 YEL 859
C258
RADIO
279 WHT/RED 3
858 BRN 4
278 PPL/WHT 1
855 LT BLU 2
280 LT GRN 7
857 WHT/ORG 8
277 LT BLU/BLK 5
859 YEL 6
C297
37 YEL 14
694 BLK/LT GRN 13
689 DK BLU 12
11
10
9
POWER (B+)
GROUND
LOGIC MUTE
ORG/LT GRN
LT BLU/WHT
804 ORG/LT GRN 8
813 LT BLU/WHT 7
807 PNK/LT GRN 6
801 TAN/YEL 5
805 WHT/LT GRN 4
811 DK GRN/ORG 3
802 ORG/RED 2
287 BLK/WHT 1
C298
L FRONT SIG (+)
L FRONT SIG (-)
L REAR SIG (+)
L REAR SIG (-)
R FRONT SIG (+)
R FRONT SIG (-)
R REAR SIG (+)
R REAR SIG (-)
FOUR CHANNEL AMPLIFIER
ORG/LT GRN (OR LT BLU/WHT)
LT BLU/WHT (OR ORG/LT GRN)
PNK/LT GRN
TAN/YEL
WHT/LT GRN
DK GRN/ ORG
ORG/ RED
BLK/ WHT
LEFT DOOR SPEAKER
LEFT REAR SPEAKER
RIGHT DOOR SPEAKER
RIGHT REAR SPEAKER
124937